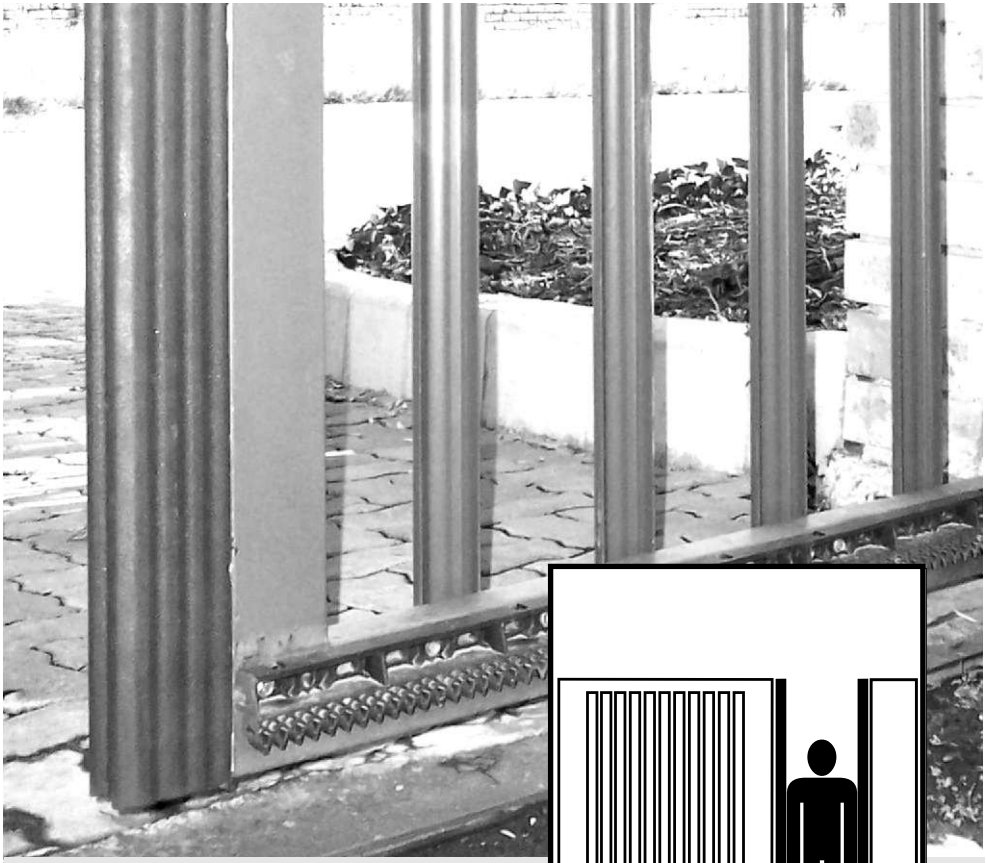

- ***Ensures an ultra safe gate installation compliant with European norms*** *(EN12453:2001, EN12978:2003)***.**
- ***Quick and easy to install.***
- ***No electrical wiring required enhances reliability.***
- ***Gives protection over the full length of the edge, without hard points.***
- ***Class 3-safety device.***

CENTURION
THE AUTOMATIC CHOICE

P36 Passive Sensitive Edge

Declaration of Conformity

Manufacturer: Centurion Systems (Pty) Ltd
148 Epsom Road
North Riding
Gauteng
South Africa

Declares that the product:

Product Name: P36 Passive Sensitive Edge

Conforms with the following specifications
(When installed according to the instructions contained herein)**:**

EN12453:2001

EN12978:2003

Conditions of Use

For compliance with EN12453:2001 and EN12978:2003 on a sliding gate installation,

- The sliding gate must be automated with either:

Operator type	Pinion size	Max. gate mass	Firmware version
D3	17 tooth	300kg.	D3V1.074CE or later
D5	13 tooth	500kg.	D5V1.074CE or later

- The operator sensitivity must be set to either **High** or **Medium.**
- The sliding gate track must be installed to be level within 50mm in 2.5m in either opening or closing directions.
- All hazards not covered by fitting the passive sensitive edge must be evaluated and suitably protected with appropriate protection devices, up to a height of at least 2.5m.

Installation Considerations

The P36 sensitive edge may only be installed by a suitably qualified person.

Install the sensitive edge only if:

1. It can sufficiently safeguard the gate installation according to the mentioned specifications with respect to hazardous protrusions, sharp shearing edges, etc.
2. Its operation and use will not pose a hazard to the public.
3. There is sufficient clearance to a roadway and/or thoroughfares.
4. The installation will meet all municipal and/or local authority requirements once installed.

General considerations for the installation:

1. Check the strength of the P36 passive edge mounting points on the gate and confirm that they are secure.
2. Check that the gate **opening distance is more than 1750mm (gate travel)**.
3. Check that the **origin marker** is correctly positioned (refer to point 5 under Mechanical Setup in this document).

Mechanical Setup

WARNING!

- The safety of the machine and its safety device(s) depends on the quality, reliability and correct installation thereof.
- To ensure continuous safe operation of the installation, the condition of the equipment and operation of all safety related systems must be checked and corrected if required, at least once every 6 months.

1. **Evaluate the site** and determine where hazardous conditions may occur (see Fig 1).
2. **Fit the passive sensitive edges** (1) to all edges that need to be protected. Using the drill (4), drill extension (3) and supplied TEK screws (2) secure the edge into position (see Fig 2) .
3. Ensure that all **hazards up to a height of at least 2.5m** from the ground are protected.
4. **Plug the mounting holes** with the sponge plugs provided (see Fig 3). It may be necessary for the plug length to be trimmed slightly to allow for the TEK screw head.
5. With the gate in the closed position ensure that the gate **origin marker is positioned at least 1000mm** or more from the gate **origin sensor** to satisfy EN 12453:2001specifications.

Fig 1

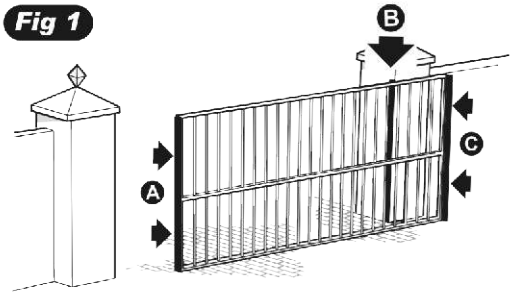

When installing PSE to sliding gates, ensure that all safety hazards are duly considered, of which the very least are in position A for anti-crushing protection, position B to protect shear hazards and position C for secondary closing edge hazards.

Fig 2

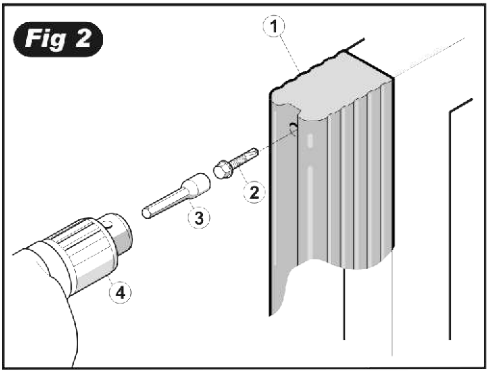

Fig 3

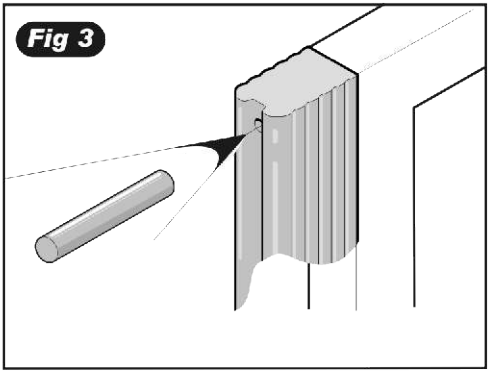

⚠ IMPORTANT

If the chip version number of the micro controller fitted to the CP80 controller ends with CE, please ensure that the distance between the origin marker (1) and the origin sensor (2) is 1000mm before programming the controller.

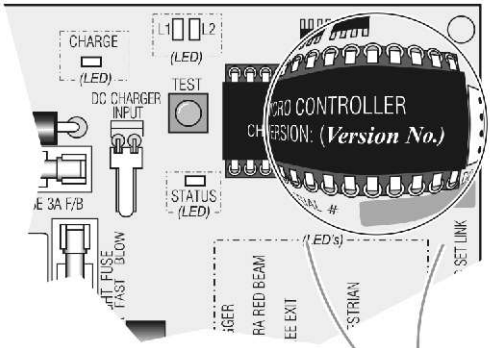

NB: If upgrading an existing installation it will be necessary to perform the automatic set-up routine after repositioning the origin marker with the gate closed.

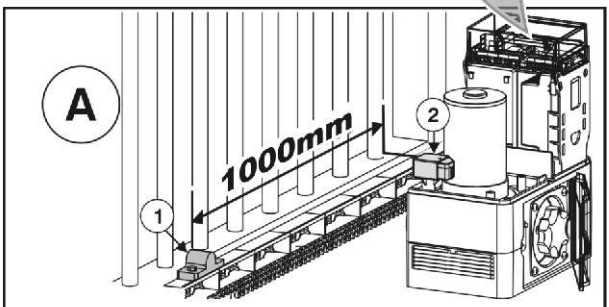

GATE SHOWN IN CLOSED POSITION

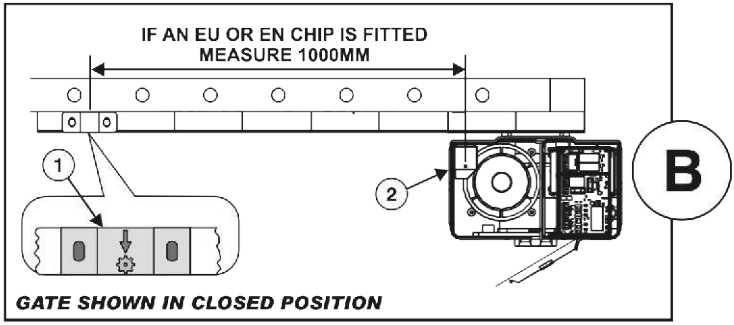

GATE SHOWN IN CLOSED POSITION

Electrical Setup

1. **Set the gate limits** for the motor to allow for the newly fitted passive edges, by following the relevant instructions in the gate motor installation manual.
2. **Set the collision sensitivity** of the operator to either **HIGH** or **MEDIUM**, by following the relevant instructions in the gate motor installation manual.

Conditions of use:

Allowable configurations:

Unlimited sensing length, but limited to D3/D5 gate motors with firmware version D3V1.074CE/D5V1.074CE or later as are supplied by Centurion Systems.

Operator type	Pinion size	Max. gate mass	Firmware version
D3	17 tooth	300kg.	D3V1.074CE or later
D5	13 tooth	500kg.	D5V1.074CE or later

Mounting orientations:

Intended purely for use on sliding gates to protect Primary, Secondary closing edges, and shear hazards where applicable.

Forces which the sensor can withstand:

Peak impact forces up to 200kg using the dia80 test piece in direction of sensing, (or against an object angled at 45°)

Weight of the sensor:

0,625kg/m

Operating temperature range:

-20 to 60°C

Safety categories: (EN954)

Category 3 (Defined by inherent electronics)

Sensor recovery time:

Less than 5 seconds.

Suitability for detection of fingers:

Not suitable for detection of fingers, but will limit forces to prevent injury.

Chemical resistance:

P36 PSE is unaffected by dilute acids, Ketones and Esters. Do not use with strong acids, aromatic solvents or chlorinated hydrocarbon solvents (ASTM 0543).

Life span/Input cycles:

The long term life span of the edge is limited by mechanical damage and/or wear of the edge, but will sustain at least 500 consecutive impact cycles per day.

Painting:

If desired, paint only with water based paint.

UV Resistance:

This passive edge is suitable for outdoor use.

Information required for use:

Detailed description:

The passive edge is a soft deforming edge that changes the impact profile of the gate in order to make the inherent drive electronics much more sensitive to detect collisions.

Range of applications:

Only for use on D3 or D5 sliding gate motors that are installed to requirements.

Automatic check systems:

Not required. The inherent detection electronics classifies as a Category-3 safety device.

Information on maintenance:

Inspection interval:

Inspect the physical condition of the edge at least every 6 months, especially if it is exposed to direct sunlight.
(Painting the P36 PSE with a water based paint will improve its durability when exposed to direct sunlight.).

Maintenance action:

Replace the edges where required when the material shows signs of weathering, or physical damage that affects more than 5% of the cross sectional area of the profile.

General Commissioning Check Sheet

Fill in data for later reference	Actual	Default	L.E.D. Quick Ref.
AUTOCLOSE ON	ON OFF	 OFF	2/1 2/2
AUTOCLOSE TIME		15 Secs	3/Time
MODE Standard Condominium PIRAC Reversing	 ☐ ☐ ☐ ☐	Standard	 4/1 4/2 4/3 4/4
PED. AUTOCLOSE TIME		5 Secs	5/Time
COURTESY LIGHT TIME		120 Secs	6/Time
COLLISION SENSITIVITY High Medium Low	 ☐ ☐ ☐	Medium	 7/1 7/2 7/3
AUTOCLOSE OVER-RIDE		3 Secs	8/Time
POSITIVE CLOSE MODE	Y N	 N	9/1 9/2
PRE-FLASHING MODE	1 2 3 OFF	 OFF	10/1 10/2 10/3 10/4
PRE-FLASH TIME		5 Secs	11/Time
COLLISION COUNT		4	12/Count
CRAWL DISTANCE (D3/D5)		350mm	13/Count (1 FLASH = 350mm)

⚠ CE Compliance

The following checks must be made in addition to the above checks to ensure a CE compliant installation:

P36 PASSIVE EDGES FITTED TO ALL HAZARDOUS EDGES	YES
D3 or D5 OPERATOR INSTALLED, WITH CE CHIP FITTED TO CONTROLLER	YES
COLLISION SENSITIVITY (see above) SET TO HIGH OR MEDIUM	YES

This check sheet must be read in conjunction with the relevant Installation Manual.

Notes

For more information, support, or spare parts please contact your local Centurion Systems representative or contact us directly at:

CENTURION SYSTEMS (PTY) LTD HEAD OFFICE:
TEL: +27 (0)-11-699-2400, FAX: +27 (0)11-704-3412 or (0)11-462-6669
(Omit (0) when dialing from outside South Africa)
148 EPSOM AVENUE, NORTH RIDING
P.O. BOX 506, CRAMERVIEW, 2060
SOUTH AFRICA
WEB: http://www.centsys.co.za General information e-mail: info@centsys.co.za

CENTURION
THE AUTOMATIC CHOICE